NAPETOST / VOLTAGE	230 V
FREKVENCA / FREQUENCY	50 Hz
NAZIVNA MOČ / NOMINAL POWER	1800 W

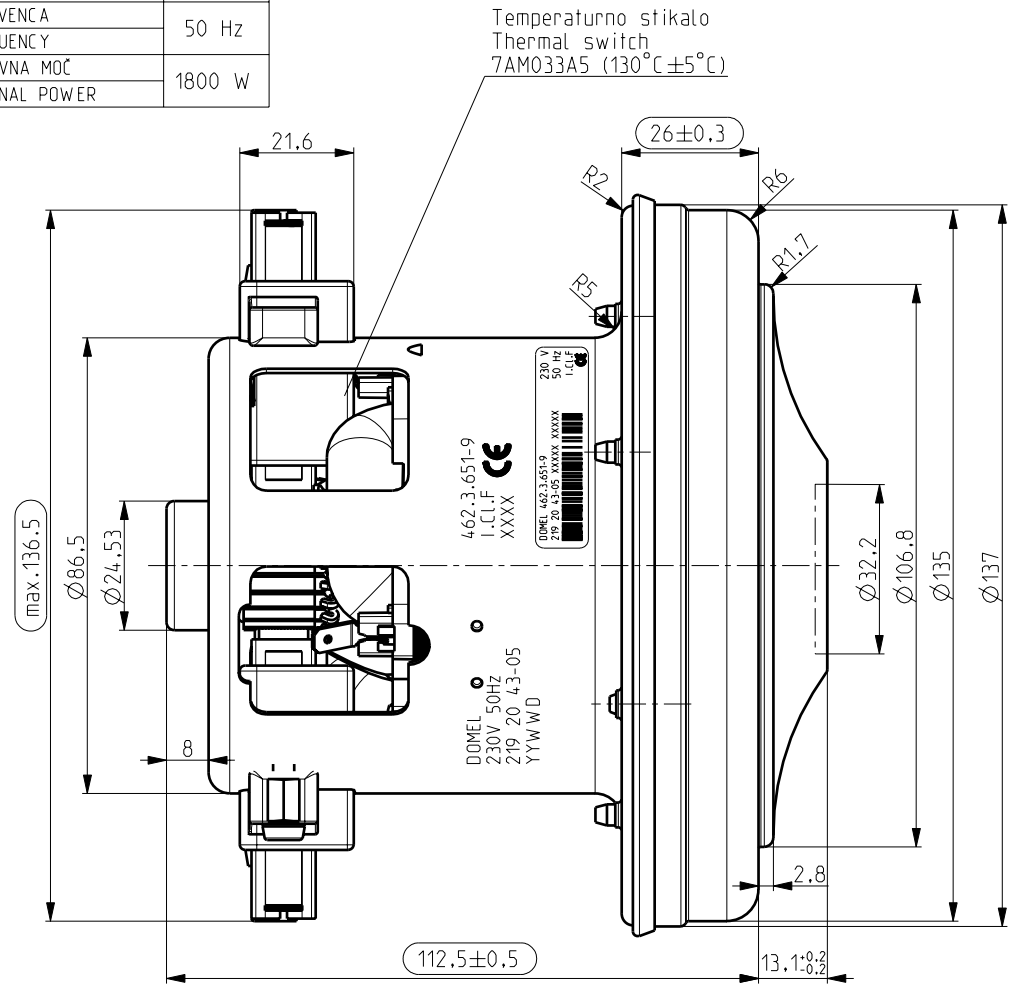

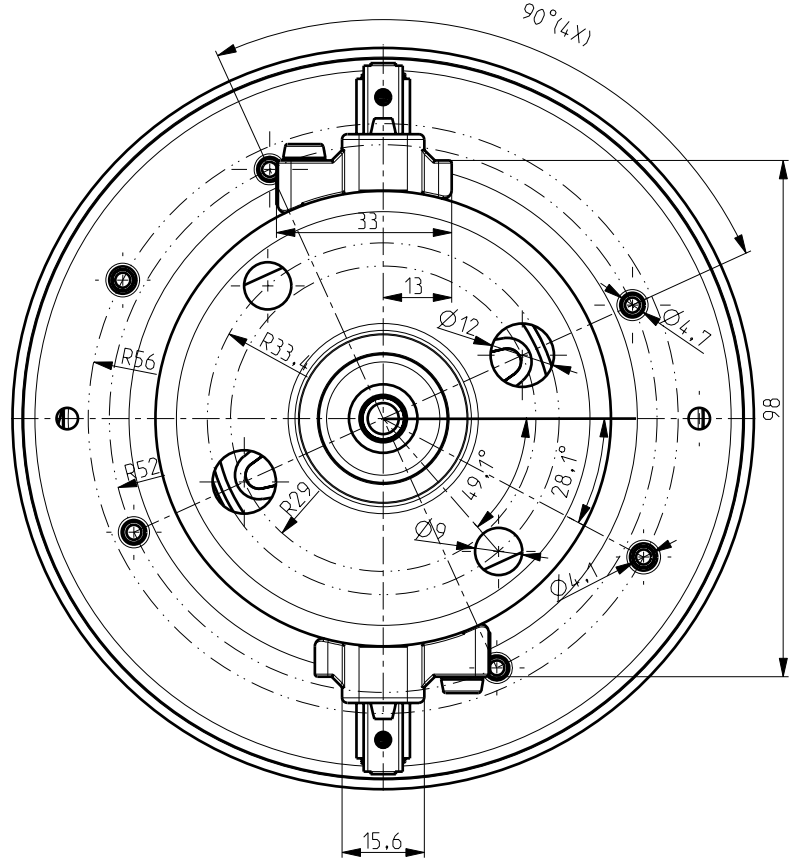

OSNOVNE ZNAČILNOSTI		TYPICAL CHARACTERISTICS	
IZVEDBA	ENOSTOPENJSKA	FAN SYSTEM	SINGLE STAGE
VLEŽAJENJE	DVA KROGLIČNA LEŽAJA	BEARINGS	DUAL BALL
VRSTA PRETOKA	SKOZI MOTOR	DISCHARGE	THRU FLOW
SMER VRTENJA	DESNA	DIRECTION OF ROTATION	CW

Ozn. Mark	Št. obvestila Nr. of notice	Datum Date	Ime Name
B1	8991	28.05.09	M. Novinc
A0	8644	18.06.08	B.Rihtaršic

Tolerance odprtih mer / Tolerances without individual indications: ISO 2768 - m

Površinska hrapavost / Surface finishing

Merilo / Scale: 1:1

Original format: ISO 5457 - A3

Gradivo / Material

	Datum/Date	Ime/Name
Izdelal / Designed	13.10.06	Pogačnik
Pregl. / Verified	28.05.09	A. Močnik

Naziv / Title: SESALNA ENOTA / VACUUM CLEANER MOTOR

DOMEL®
Otoki 21, 4228 Železniki, Slovenija

Koda / Code: 462.3.651-9

List / Sheet: 3+

Stran / Page: 1

4623651009_MKR2651-9

Izdelano s CAD/ProEngineer - ročno spreminjanje ni dovoljeno! Vsak prenos tretjim osebam ali uporaba v nedogovorjene namene ni dovoljena po zakonu o avtorskih pravicah.
Made with CAD/ProEngineer - changing is not allowed! Any unauthorized copying of this drawing or unauthorized distribution of the information contained herein is prohibited.